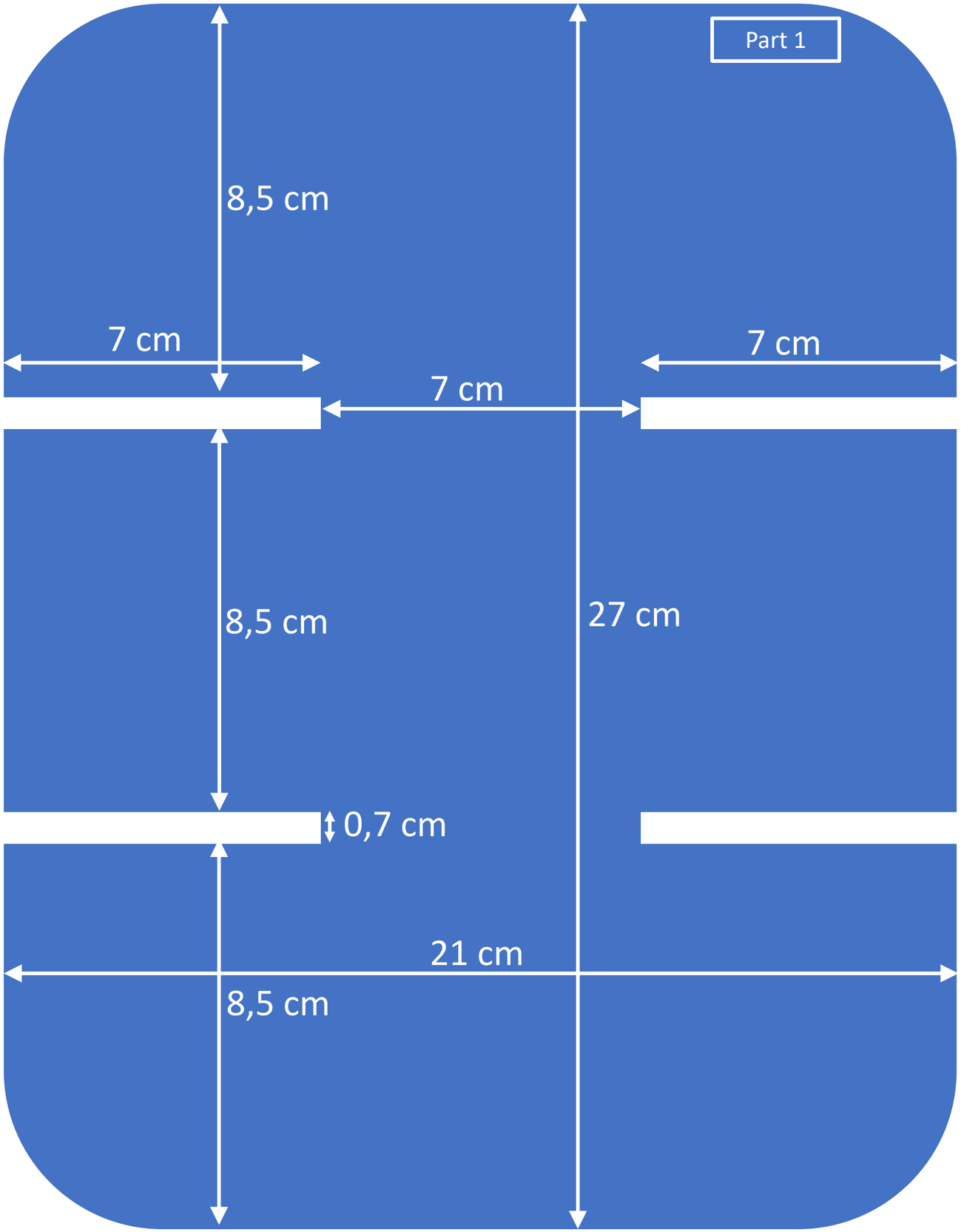
Part 1
8,5 cm
7 cm
7 cm
7 cm
8,5 cm
27 cm
0,7 cm
21 cm
8,5 cm

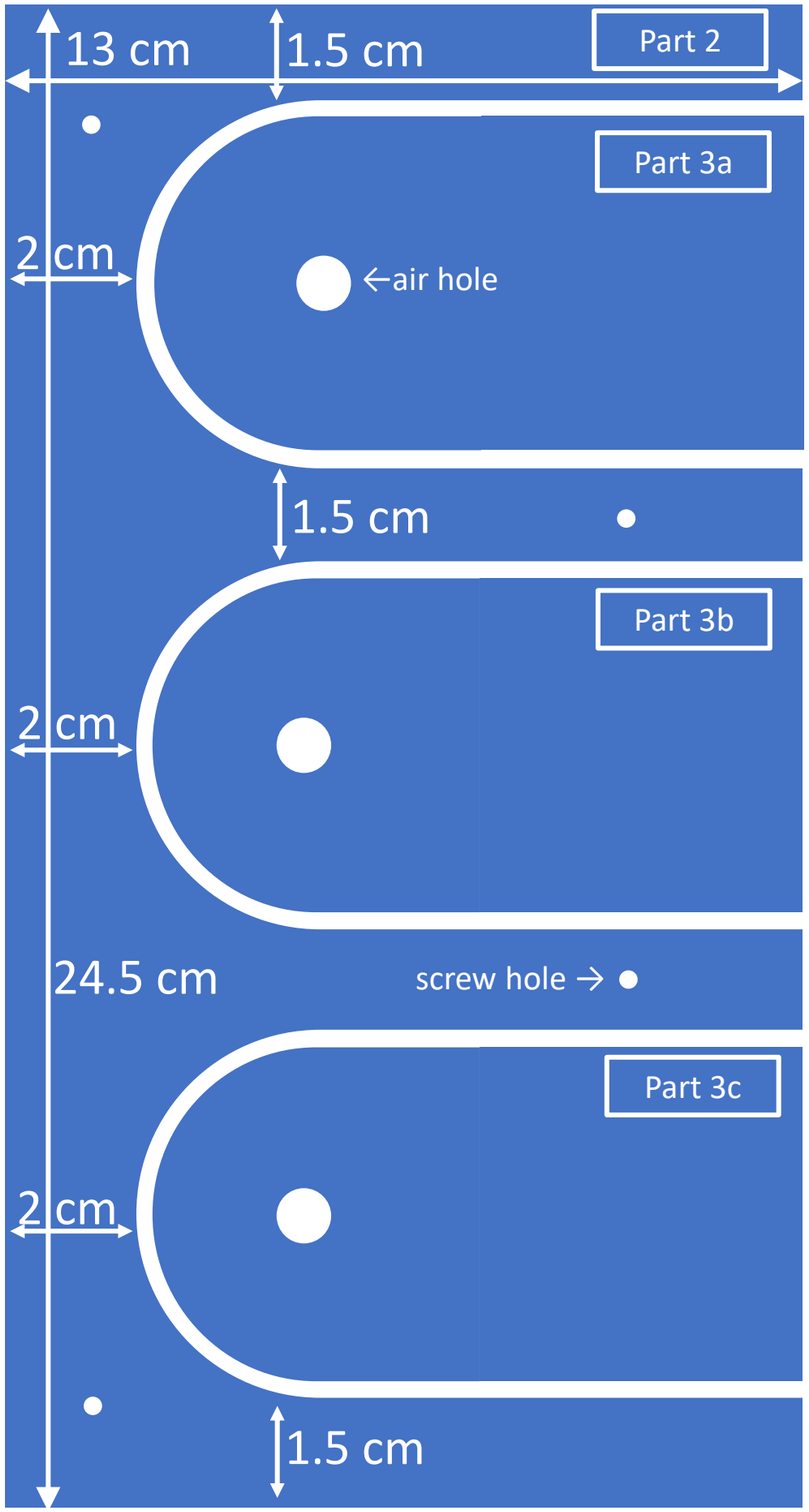
13 cm
1.5 cm
Part 2
Part 3a
2 cm
←air hole
1.5 cm
Part 3b
2 cm
24.5 cm
screw hole →
Part 3c
2 cm
1.5 cm